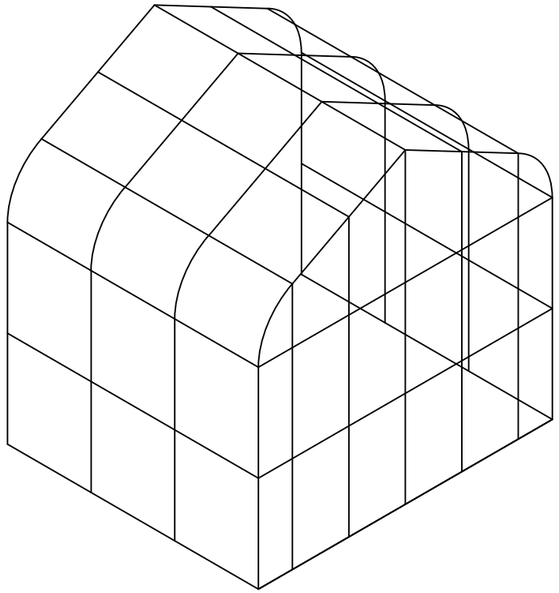

CURVED EAVE DOUBLE PITCH

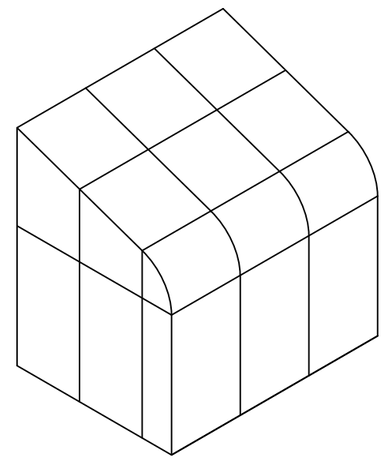

CURVED EAVE LEAN-TO

UNIT INFORMATION
GLAZING SET UP: Opening for $\frac{3}{16}$" Monolithic Glazing to 1" Insulated Glazing, Polycarbonate, or Solid Panel Infill Decorative interior and exterior low profile grid option. Custom Configurations Available Upon Request Designed and Manufactured in the U.S.A.

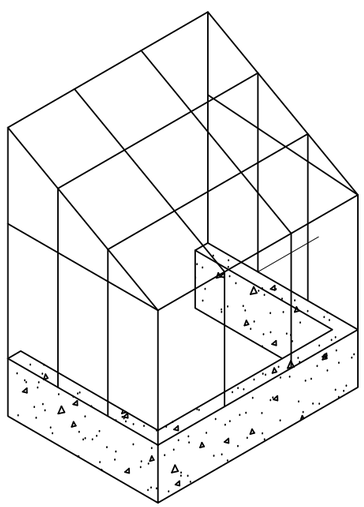

STRAIGHT EAVE LEAN-TO

ISOMETRIC ELEVATION

NOT TO SCALE

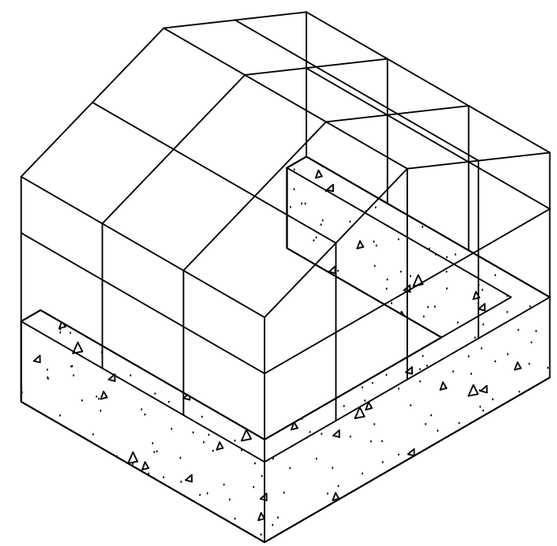

STRAIGHT EAVE DOUBLE PITCH

© 2017 Solar Innovations, Inc. - All Rights Reserved. These plans are the property of Solar Innovations, Inc. Any use or reproduction of these plans, in whole or in part, without the written permission of Solar Innovations, Inc. is forbidden.

SOLAR INNOVATIONS®
GLASS STRUCTURES

SI5000 Glazed Structures - Design Sample Options

ALL DATA CONTAINED HERE IN IS CONSIDERED COMPANY CONFIDENTIAL INFORMATION AND IS SUBJECT TO OUR CONFIDENTIALITY AGREEMENT AS SET FORTH ON OUR WEBSITE AT http://www.solarinnovations.com/contact/

ALL DRAWINGS ARE VIEWED FROM THE EXTERIOR LOOKING IN.

DRAWING SCALE: NOT TO SCALE

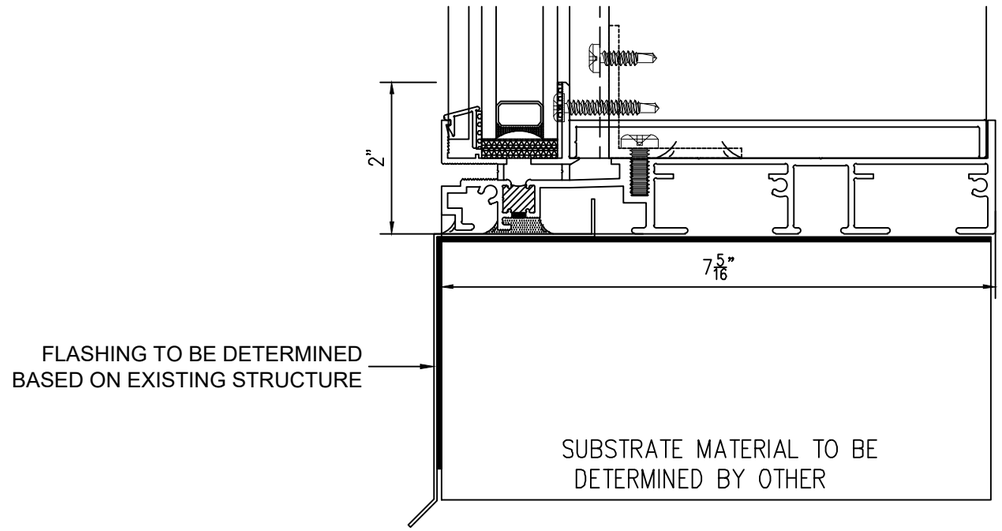

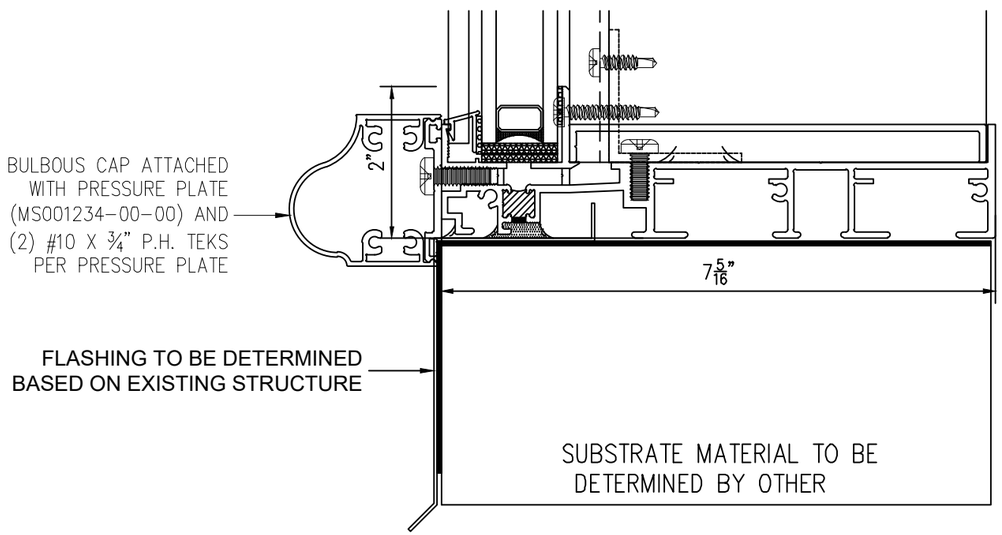

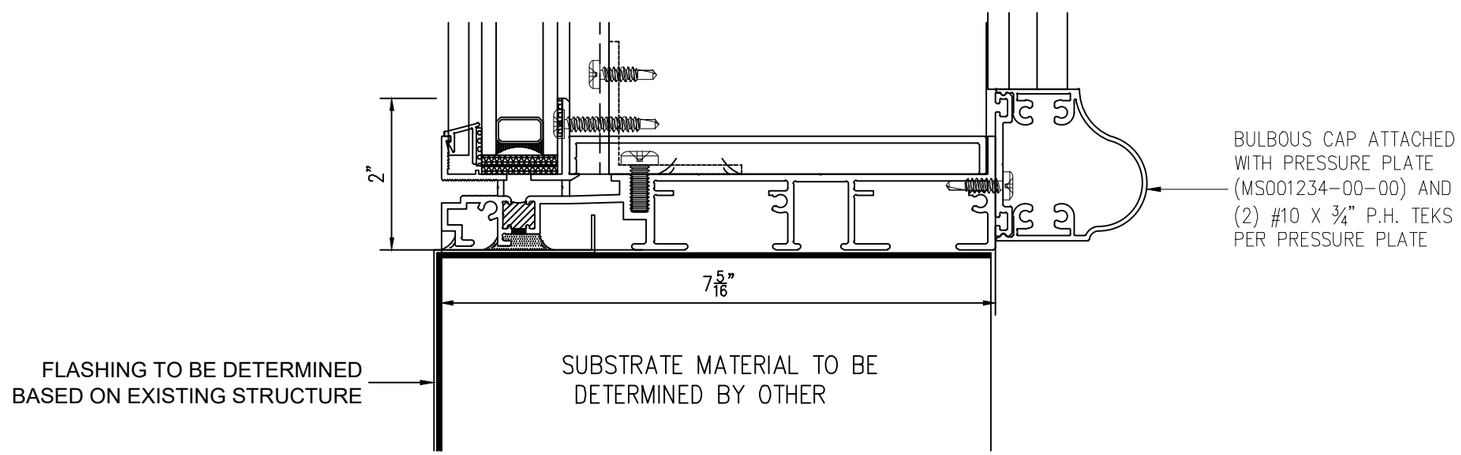

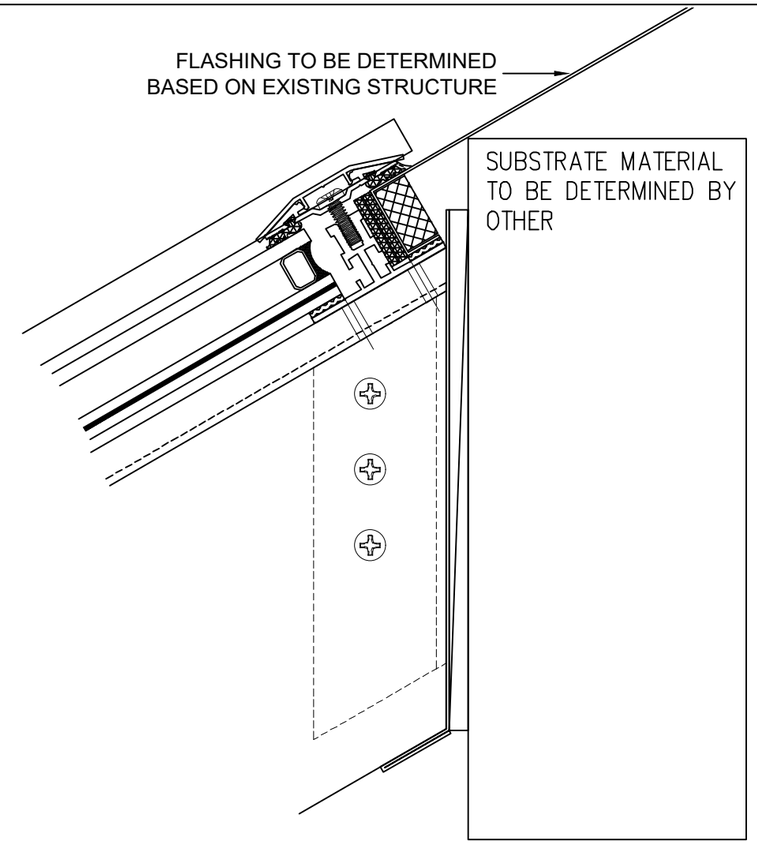

LEAN-TO RIDGE DETAIL

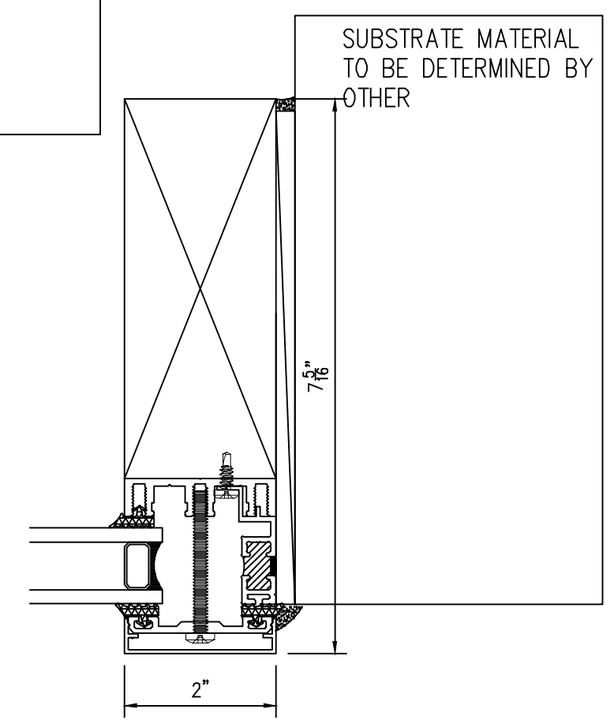

VERTICAL JAMB DETAIL

SOLAR INNOVATIONS® GLASS STRUCTURES

SI5000 Glazed Structures - Standard Details

ALL DATA CONTAINED HEREIN IS CONSIDERED COMPANY CONFIDENTIAL INFORMATION AND IS SUBJECT TO OUR CONFIDENTIALITY AGREEMENT AS SET FORTH ON OUR WEBSITE AT http://www.solarinnovations.com/contact/

DRAWING SCALE:
6" = 1'-0"

© 2021 Solar Innovations® Architectural Glazing Systems – All Rights Reserved. These plans are the property of Solar Innovations® Architectural Glazing Systems. Any use or reproduction of these plans, in whole or in part, without the written permission of Solar Innovations® Architectural Glazing Systems is forbidden.

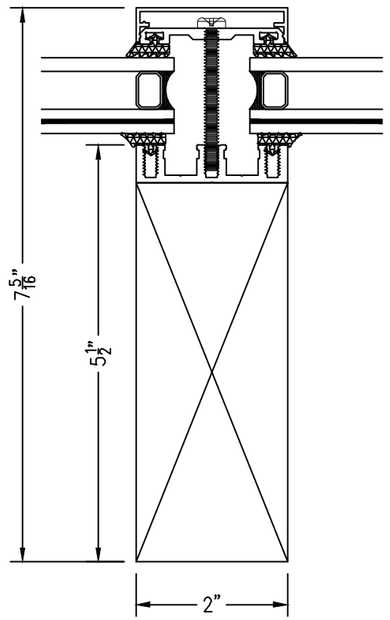

SLOPED JAMB DETAIL

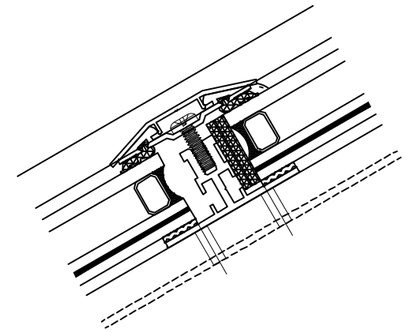

SLOPED MUNTIN DETAIL

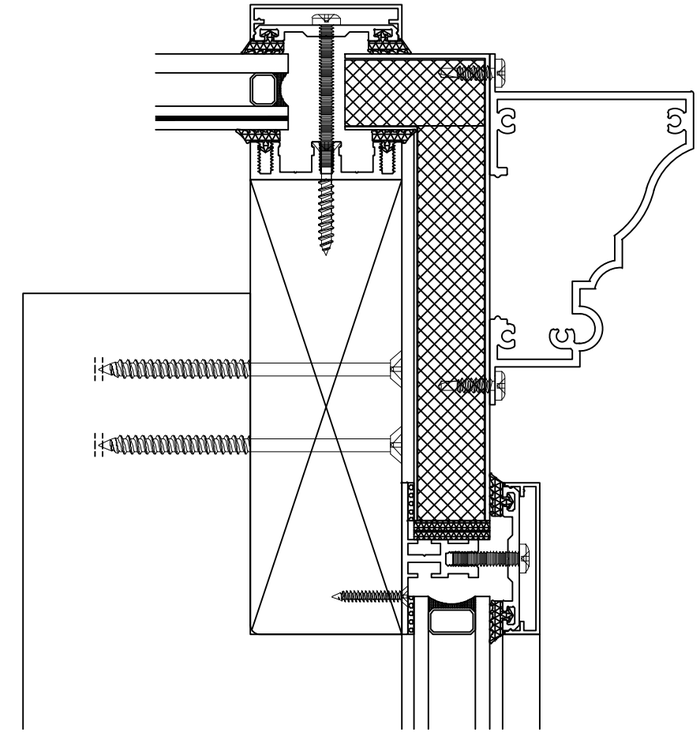

SLOPED GABLE DETAIL

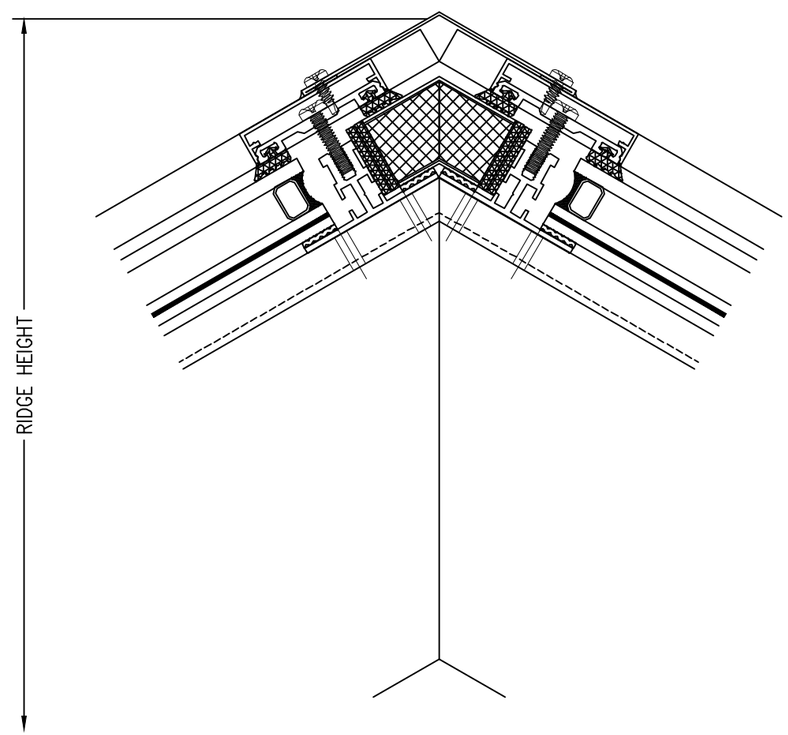

DOUBLE PITCH RIDGE DETAIL

SOLAR INNOVATIONS®
GLASS STRUCTURES

SI5000 Glazed Structures - Standard Details

ALL DATA CONTAINED HEREIN IS CONSIDERED COMPANY CONFIDENTIAL INFORMATION AND IS SUBJECT TO OUR CONFIDENTIALITY AGREEMENT AS SET FORTH ON OUR WEBSITE AT http://www.solarinnovations.com/contact/

DRAWING SCALE:
6" = 1'-0"

© 2021 Solar Innovations® Architectural Glazing Systems – All Rights Reserved. These plans are the property of Solar Innovations® Architectural Glazing Systems. Any use or reproduction of these plans, in whole or in part, without the written permission of Solar Innovations® Architectural Glazing Systems is forbidden.

2" SYSTEM RAFTERS

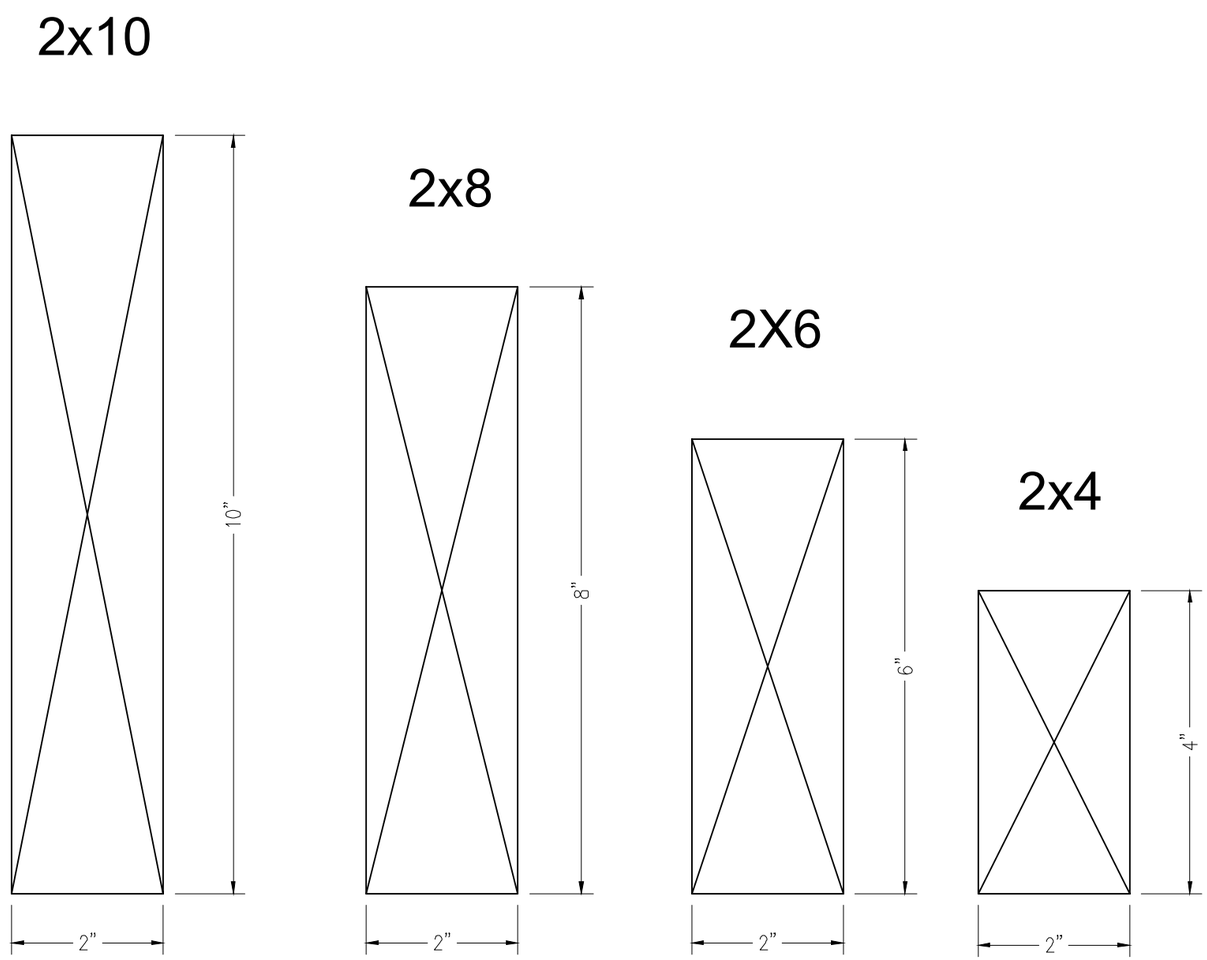

** Rafter Approval based on Final Engineering **

© 2021 Solar Innovations® Architectural Glazing Systems – All Rights Reserved. These plans are the property of Solar Innovations® Architectural Glazing Systems. Any use or reproduction of these plans, in whole or in part, without the written permission of Solar Innovations® Architectural Glazing Systems is forbidden.

SOLAR INNOVATIONS® GLASS STRUCTURES

SI5000 Glazed Structures - Wood Rafter Options

ALL DATA CONTAINED HEREIN IS CONSIDERED COMPANY CONFIDENTIAL INFORMATION AND IS SUBJECT TO OUR CONFIDENTIALITY AGREEMENT AS SET FORTH ON OUR WEBSITE AT http://www.solarinnovations.com/contact/

DRAWING SCALE:
6" = 1'-0"

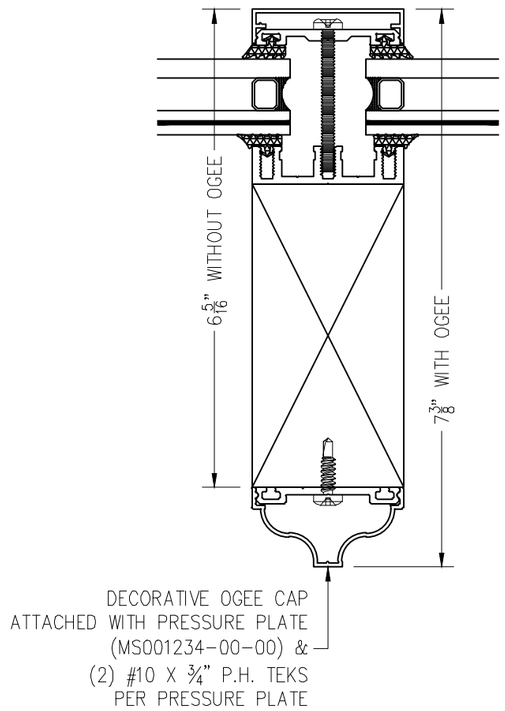

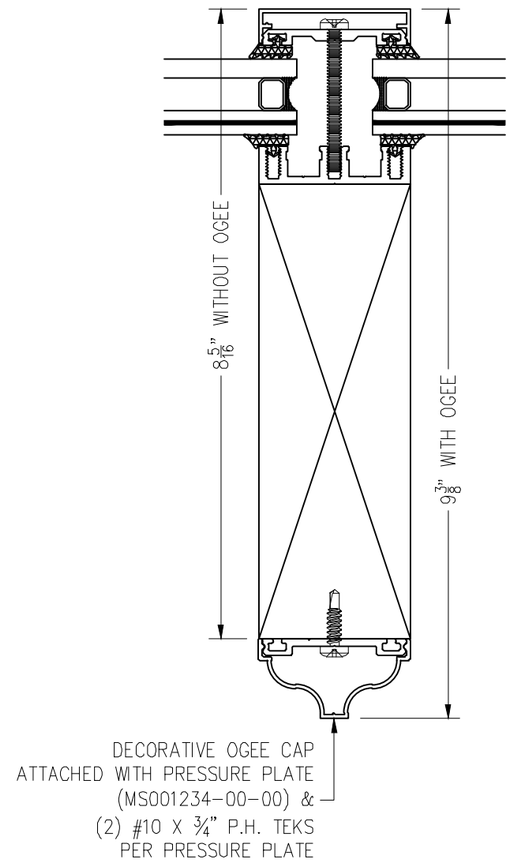

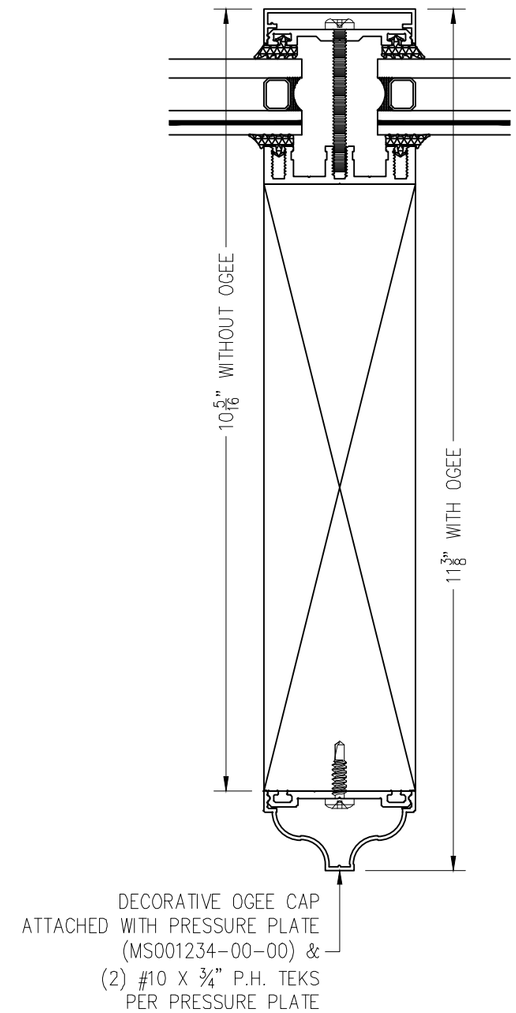

SOLAR INNOVATIONS®
GLASS STRUCTURES

SI5000 Glazed Structures - Rafter Accessories

ALL DATA CONTAINED HERE IN IS CONSIDERED COMPANY CONFIDENTIAL INFORMATION AND IS SUBJECT TO OUR CONFIDENTIALITY AGREEMENT AS SET FORTH ON OUR WEBSITE AT http://www.solarinnovations.com/contact/

DRAWING SCALE:
6" = 1'-0"

PAGE No.:
4 OF 15

© 2021 Solar Innovations® Architectural Glazing Systems – All Rights Reserved. These plans are the property of Solar Innovations® Architectural Glazing Systems. Any use or reproduction of these plans, in whole or in part, without the written permission of Solar Innovations® Architectural Glazing Systems is forbidden.

STANDARD EAVE DETAIL

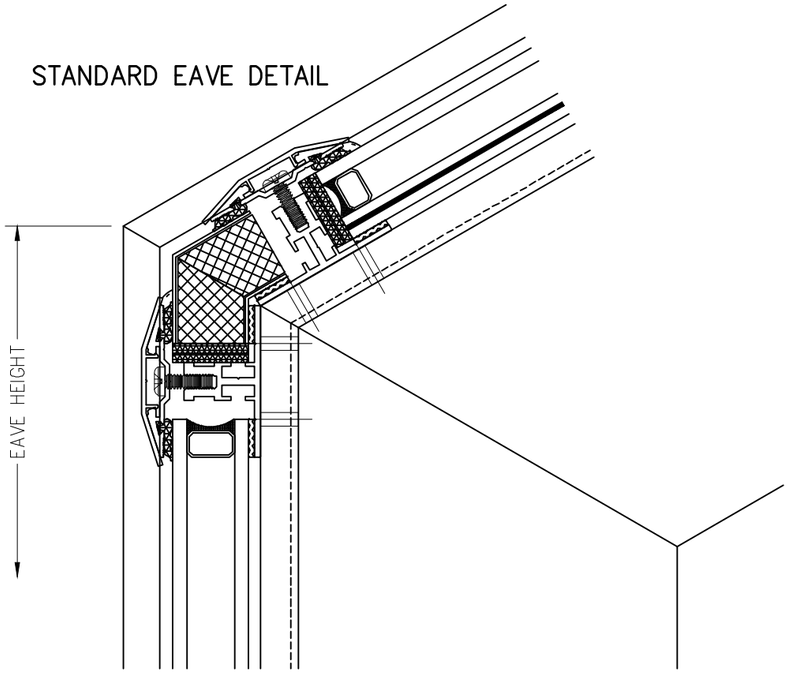

EAVE DETAIL WITH GUTTER SELECTED

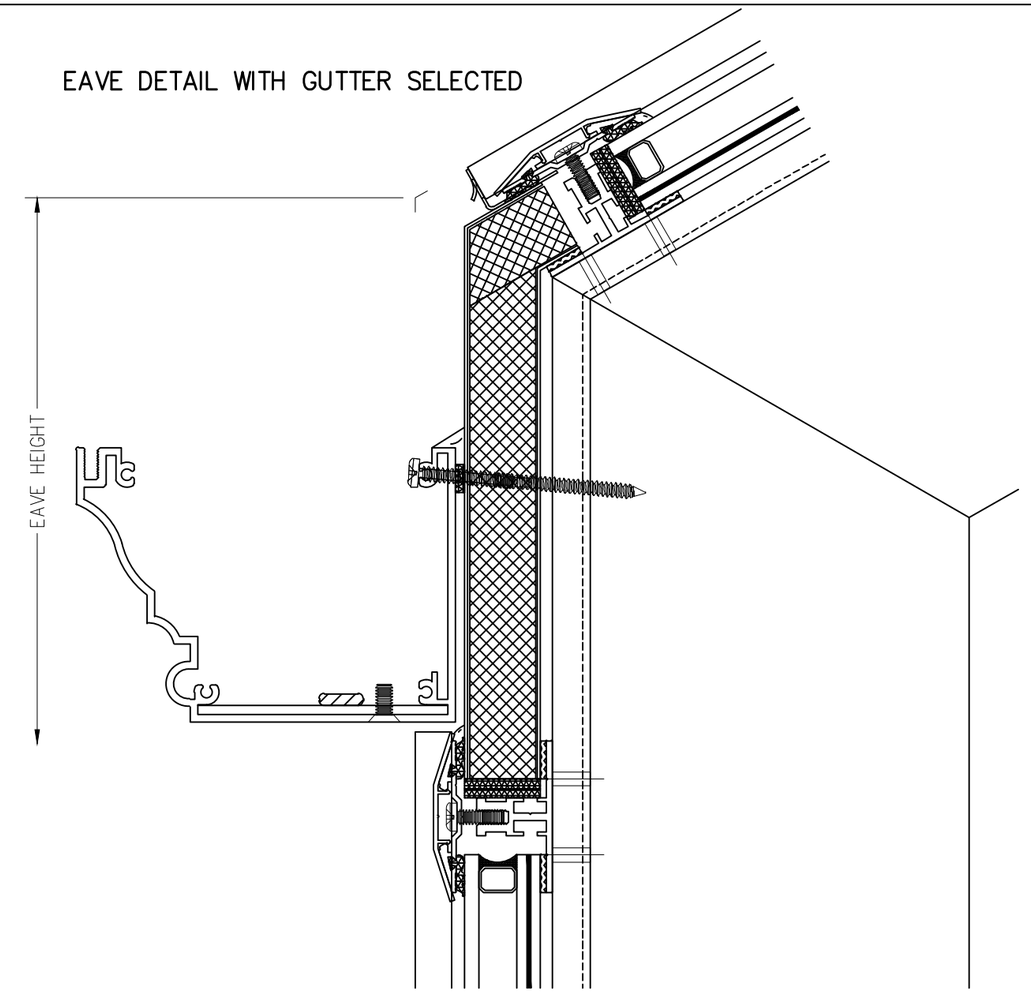

COLOR MATCHED 2 1/2" ROUND DOWNSPOUTS & ELBOWS ALSO AVAILABLE

SI STANDARD GUTTER PROFILES

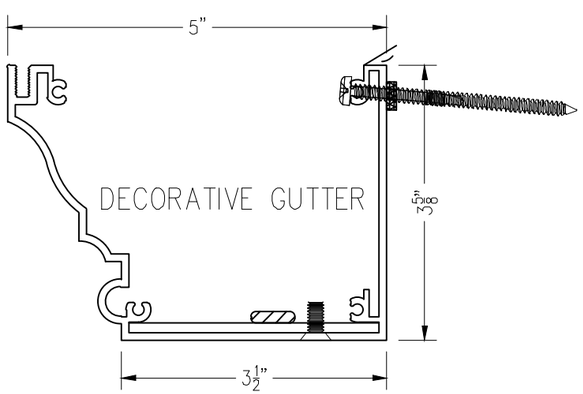

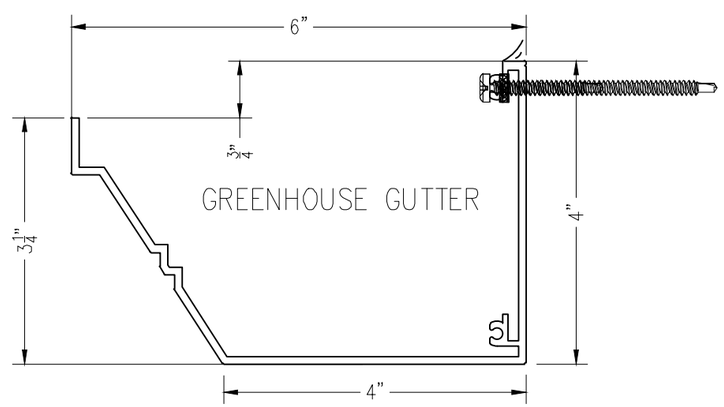

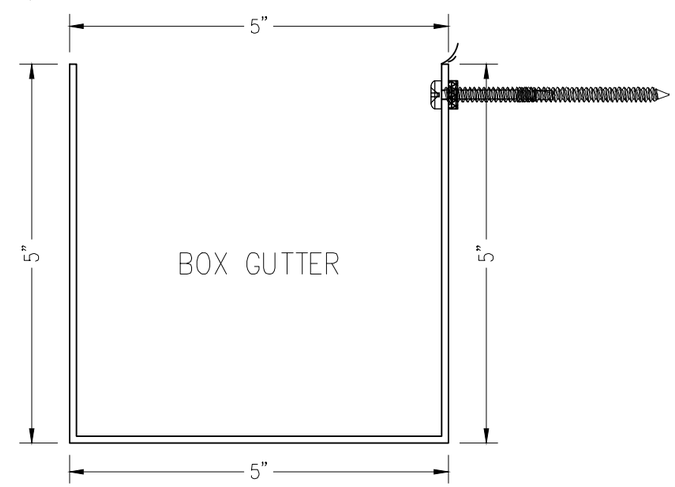

© 2021 Solar Innovations® Architectural Glazing Systems – All Rights Reserved. These plans are the property of Solar Innovations® Architectural Glazing Systems. Any use or reproduction of these plans, in whole or in part, without the written permission of Solar Innovations® Architectural Glazing Systems is forbidden.

SOLAR INNOVATIONS® GLASS STRUCTURES

SI5000 Glazed Structures - Eave Details

ALL DATA CONTAINED HEREIN IS CONSIDERED COMPANY CONFIDENTIAL INFORMATION AND IS SUBJECT TO OUR CONFIDENTIALITY AGREEMENT AS SET FORTH ON OUR WEBSITE AT http://www.solarinnovations.com/contact/

DRAWING SCALE:
6" = 1'-0"

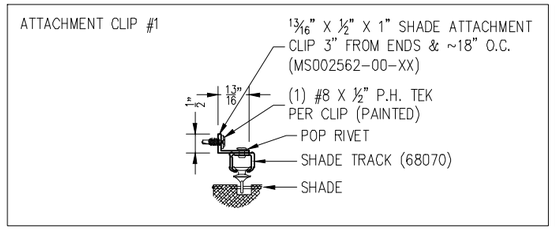

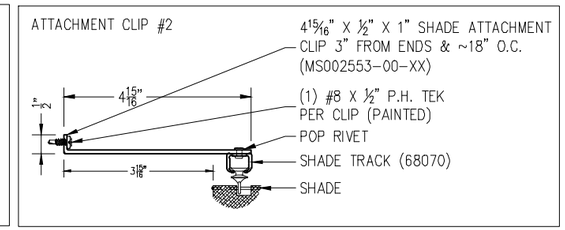

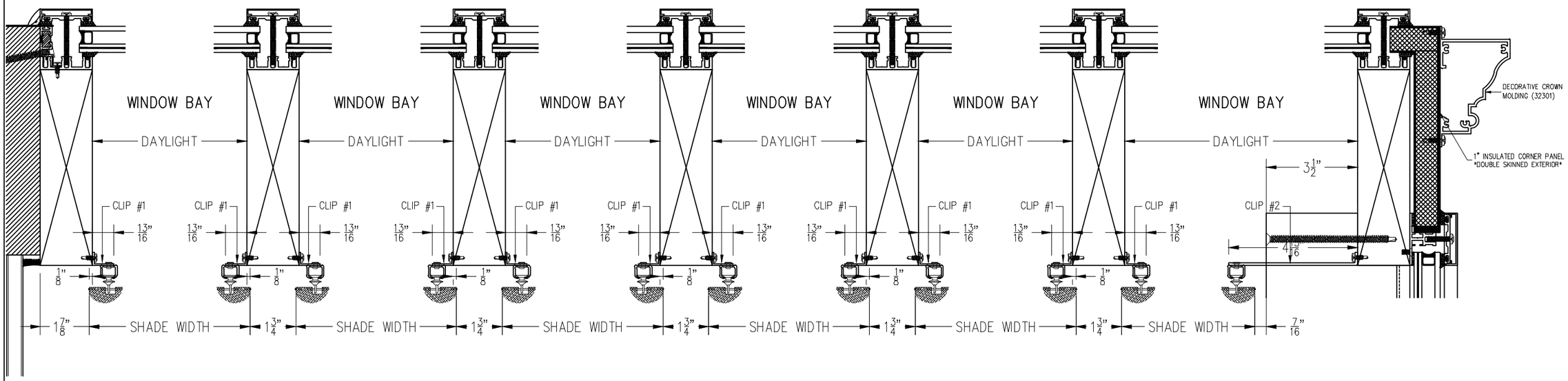

SHADE LAYOUT

STANDARD DETAIL

SOLAR INNOVATIONS® GLASS STRUCTURES

SI5000 Glazed Structures - Shade Details

ALL DATA CONTAINED HERE IN IS CONSIDERED COMPANY CONFIDENTIAL INFORMATION AND IS SUBJECT TO OUR CONFIDENTIALITY AGREEMENT AS SET FORTH ON OUR WEBSITE AT http://www.solarinnovations.com/contact/

DRAWING SCALE: 3" = 1'-0"

© 2021 Solar Innovations® Architectural Glazing Systems – All Rights Reserved. These plans are the property of Solar Innovations® Architectural Glazing Systems. Any use or reproduction of these plans, in whole or in part, without the written permission of Solar Innovations® Architectural Glazing Systems is forbidden.

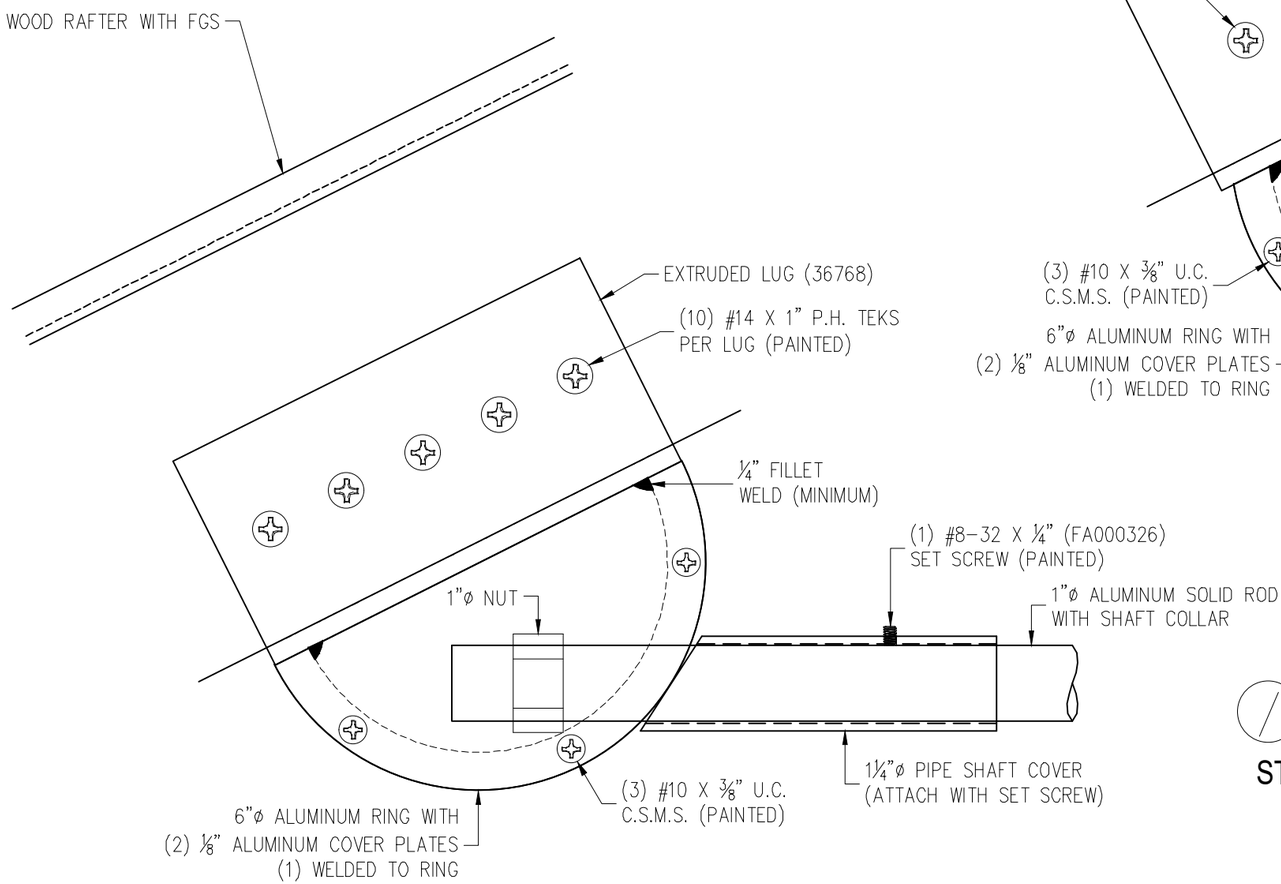

CROSS TIE CONNECTION
STANDARD DETAIL

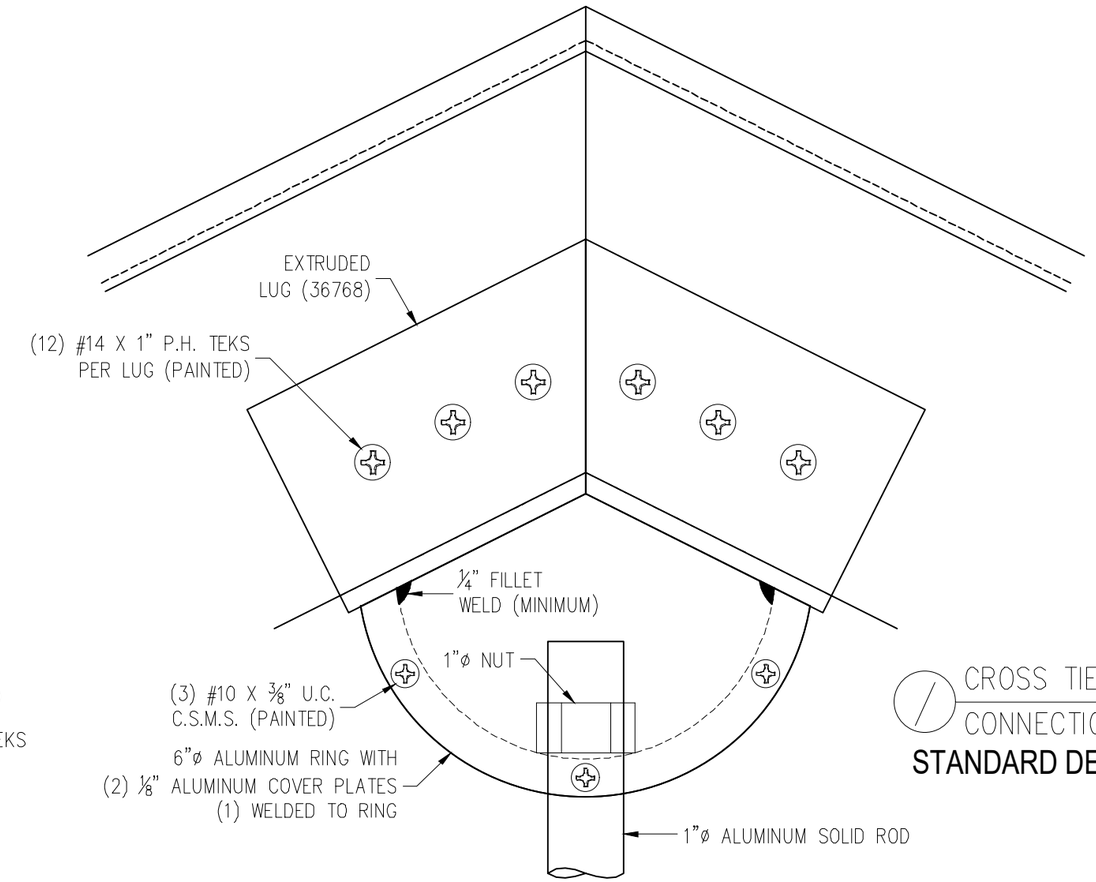

CROSS TIE CONNECTION
STANDARD DETAIL

SOLAR INNOVATIONS® GLASS STRUCTURES

SI5000 Glazed Structures - Decorative Cross Tie

ALL DATA CONTAINED HERE IN IS CONSIDERED COMPANY CONFIDENTIAL INFORMATION AND IS SUBJECT TO OUR CONFIDENTIALITY AGREEMENT AS SET FORTH ON OUR WEBSITE AT http://www.solarinnovations.com/contact/

DRAWING SCALE: 6" = 1'-0"

© 2021 Solar Innovations® Architectural Glazing Systems – All Rights Reserved. These plans are the property of Solar Innovations® Architectural Glazing Systems. Any use or reproduction of these plans, in whole or in part, without the written permission of Solar Innovations® Architectural Glazing Systems is forbidden.

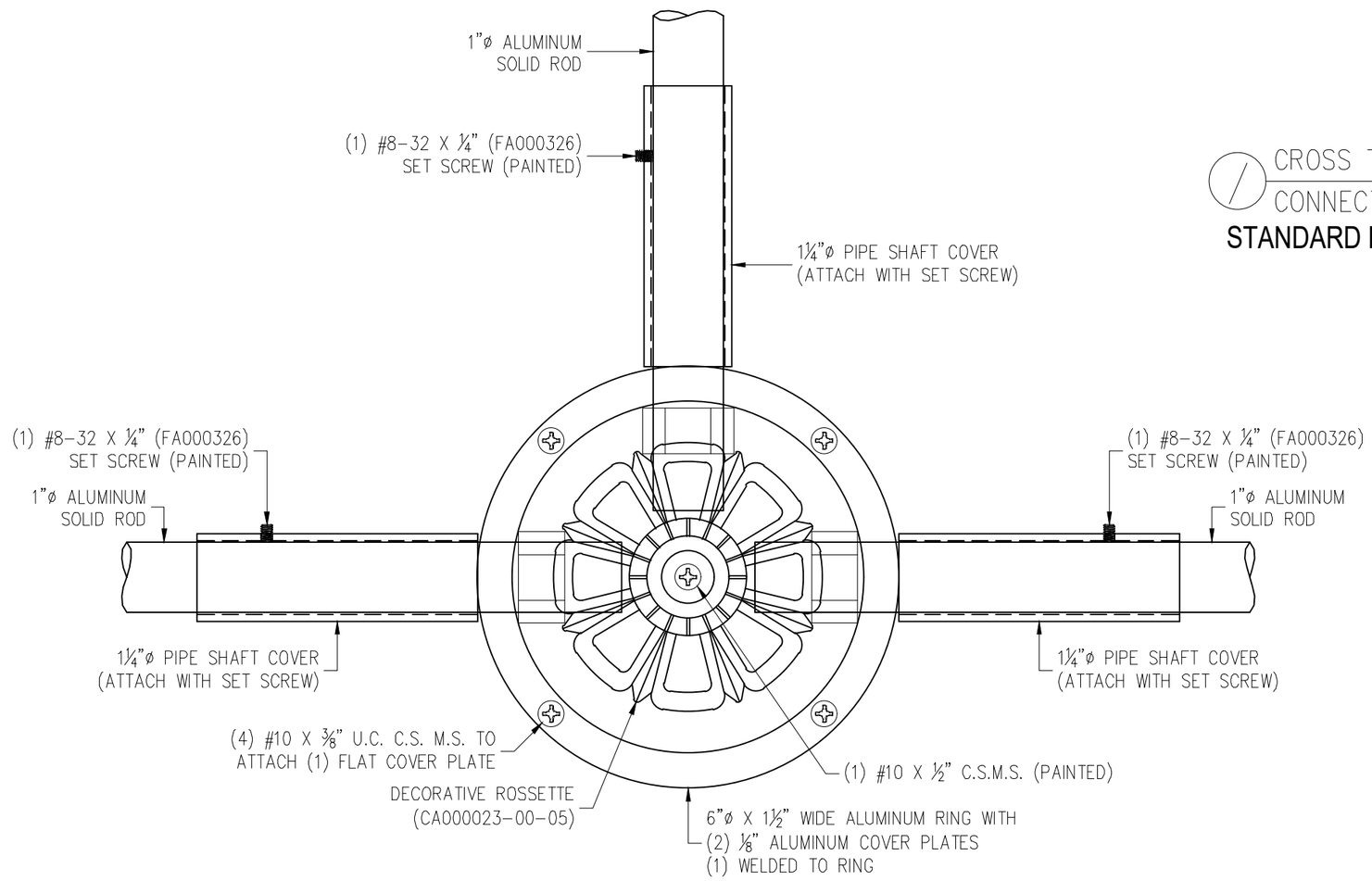

1 CROSS TIE CONNECTION
STANDARD DETAIL

SOLAR INNOVATIONS® GLASS STRUCTURES

SI5000 Glazed Structures - Decorative Cross Tie

ALL DATA CONTAINED HERE IN IS CONSIDERED COMPANY CONFIDENTIAL INFORMATION AND IS SUBJECT TO OUR CONFIDENTIALITY AGREEMENT AS SET FORTH ON OUR WEBSITE AT http://www.solarinnovations.com/contact/

DRAWING SCALE: 6" = 1'-0"

© 2021 Solar Innovations® Architectural Glazing Systems – All Rights Reserved. These plans are the property of Solar Innovations® Architectural Glazing Systems. Any use or reproduction of these plans, in whole or in part, without the written permission of Solar Innovations® Architectural Glazing Systems is forbidden.

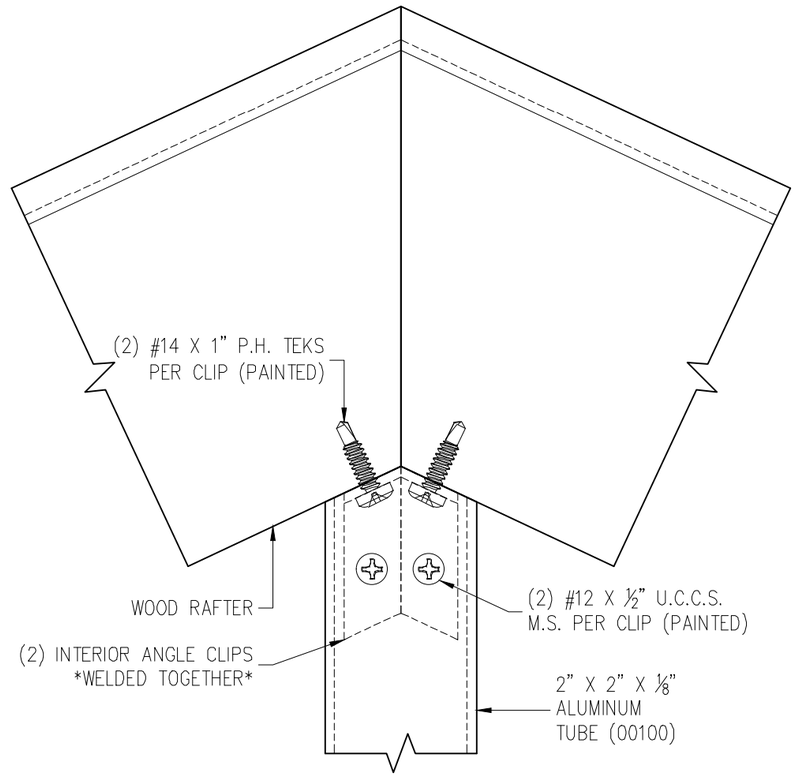

CROSS TIE CONNECTION
STANDARD DETAIL

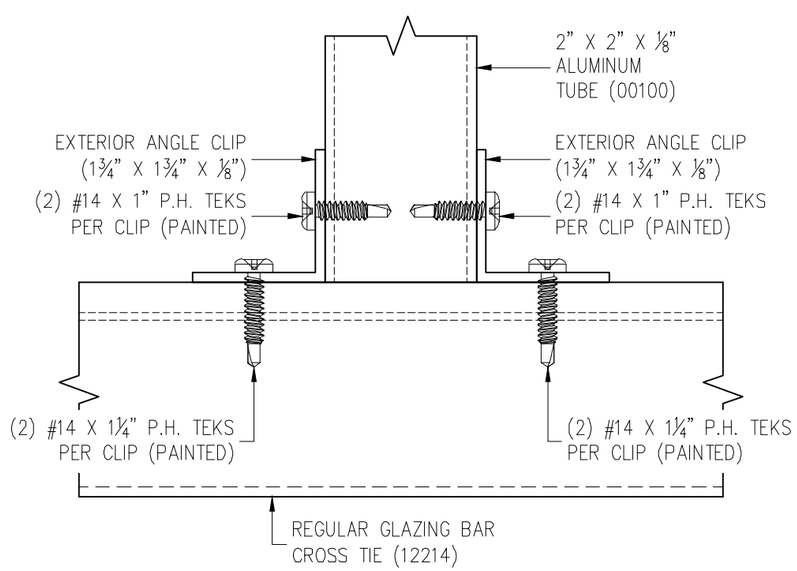

CROSS TIE CONNECTION
STANDARD DETAIL

SOLAR INNOVATIONS®
GLASS STRUCTURES

SI5000 Glazed Structures - Decorative Cross Tie

ALL DATA CONTAINED HERE IN IS CONSIDERED COMPANY CONFIDENTIAL INFORMATION AND IS SUBJECT TO OUR CONFIDENTIALITY AGREEMENT AS SET FORTH ON OUR WEBSITE AT http://www.solarinnovations.com/contact/

DRAWING SCALE:
6" = 1'-0"

© 2021 Solar Innovations® Architectural Glazing Systems – All Rights Reserved. These plans are the property of Solar Innovations® Architectural Glazing Systems. Any use or reproduction of these plans, in whole or in part, without the written permission of Solar Innovations® Architectural Glazing Systems is forbidden.

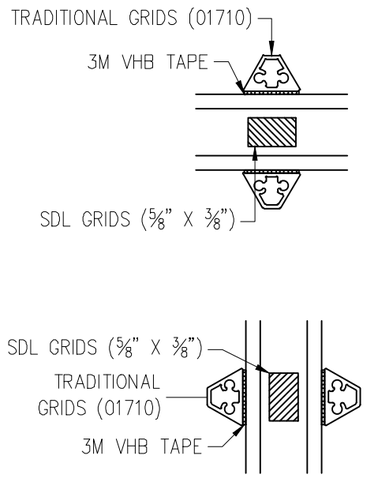

H01710
TRADITIONAL
GRID

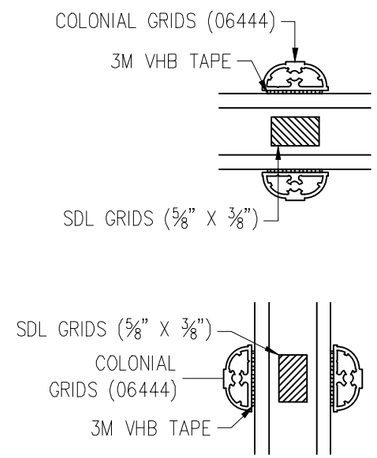

H06444
COLONIAL
GRID

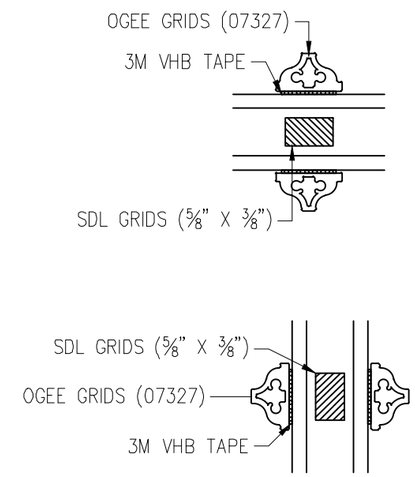

H07327
OGEE
GRID

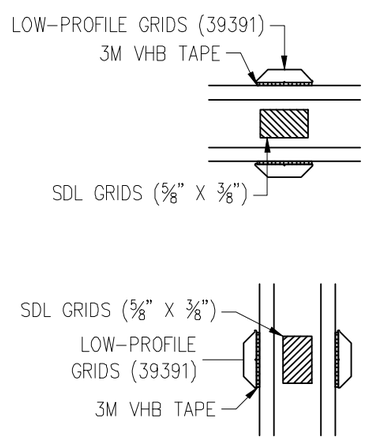

S39391
LOW PROFILE
GRID

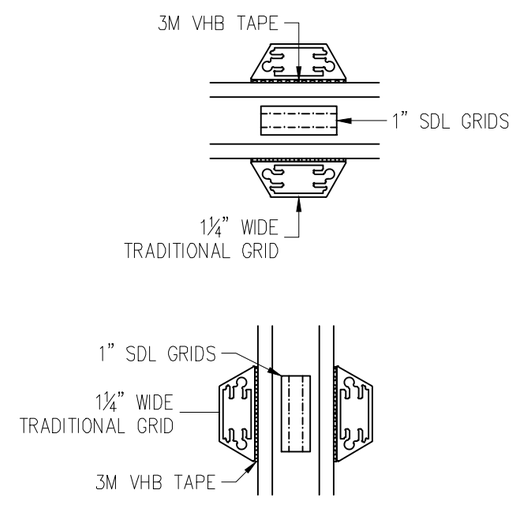

H11728
1 1/4" WIDE
TRADITIONAL GRID

SOLAR INNOVATIONS®
GLASS STRUCTURES

SI5000 Glazed Structures - Decorative Grid Options

ALL DATA CONTAINED HERE IN IS CONSIDERED COMPANY CONFIDENTIAL INFORMATION AND IS SUBJECT TO OUR CONFIDENTIALITY AGREEMENT AS SET FORTH ON OUR WEBSITE AT http://www.solarinnovations.com/contact/

DRAWING SCALE:
6" = 1'-0"

© 2021 Solar Innovations® Architectural Glazing Systems – All Rights Reserved. These plans are the property of Solar Innovations® Architectural Glazing Systems. Any use or reproduction of these plans, in whole or in part, without the written permission of Solar Innovations® Architectural Glazing Systems is forbidden.

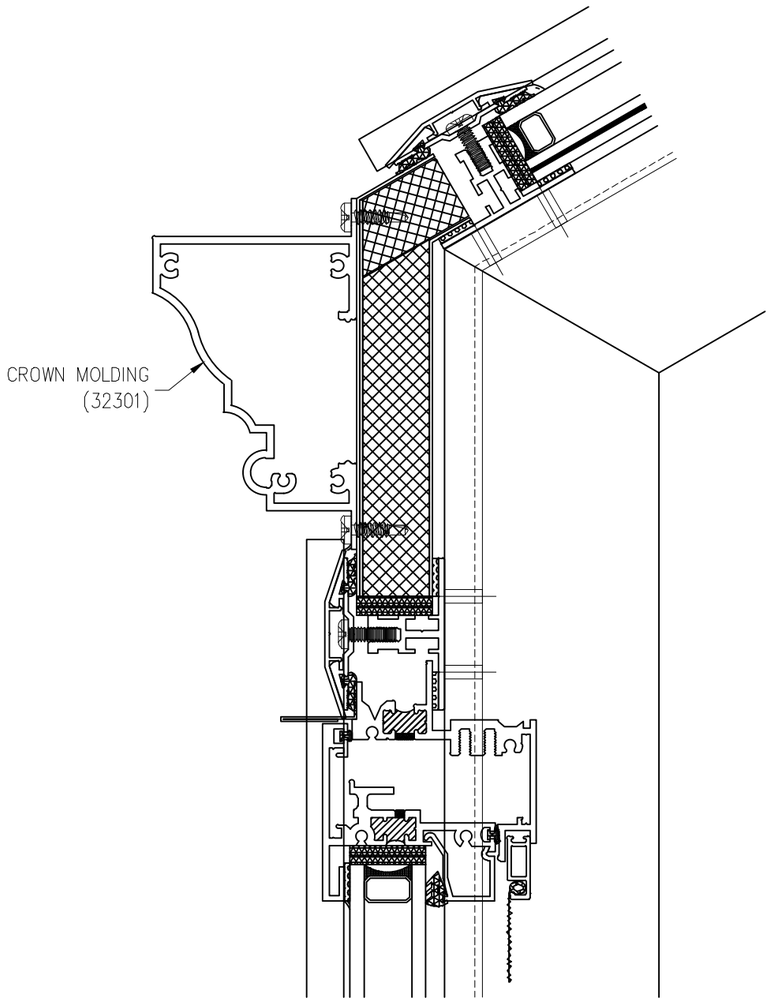

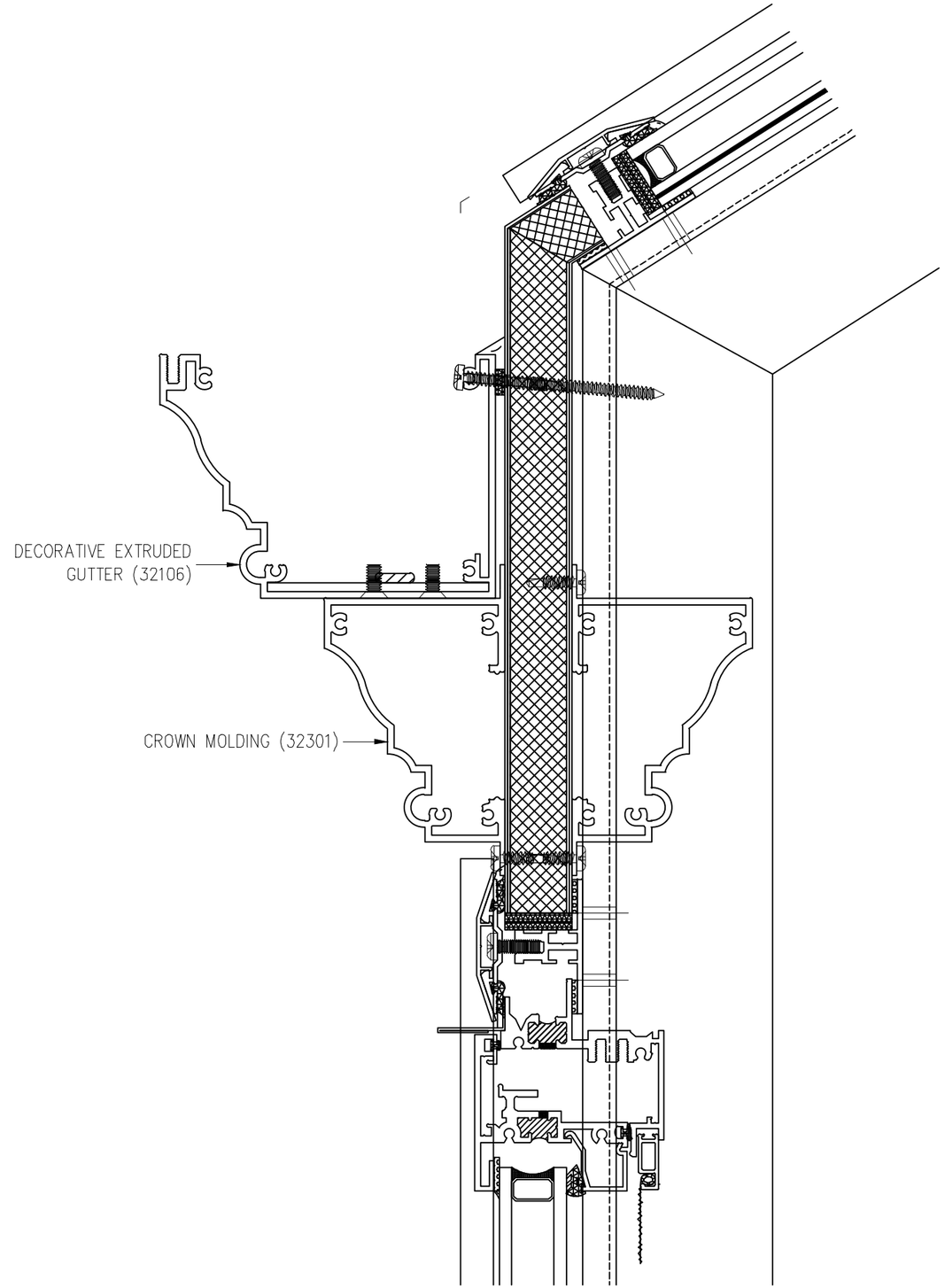

SOLAR INNOVATIONS®
GLASS STRUCTURES

SI5000 Glazed Structures - Crown Molding

ALL DATA CONTAINED HEREIN IS CONSIDERED COMPANY CONFIDENTIAL INFORMATION AND IS SUBJECT TO OUR CONFIDENTIALITY AGREEMENT AS SET FORTH ON OUR WEBSITE AT http://www.solarinnovations.com/contact/

DRAWING SCALE:
6" = 1'-0"

PAGE No.:
11 OF 15

© 2021 Solar Innovations® Architectural Glazing Systems – All Rights Reserved. These plans are the property of Solar Innovations® Architectural Glazing Systems. Any use or reproduction of these plans, in whole or in part, without the written permission of Solar Innovations® Architectural Glazing Systems is forbidden.

© 2021 Solar Innovations® Architectural Glazing Systems – All Rights Reserved. These plans are the property of Solar Innovations® Architectural Glazing Systems. Any use or reproduction of these plans, in whole or in part, without the written permission of Solar Innovations® Architectural Glazing Systems is forbidden.

CORNER COLUMN EAVE SECTION

STANDARD DETAIL

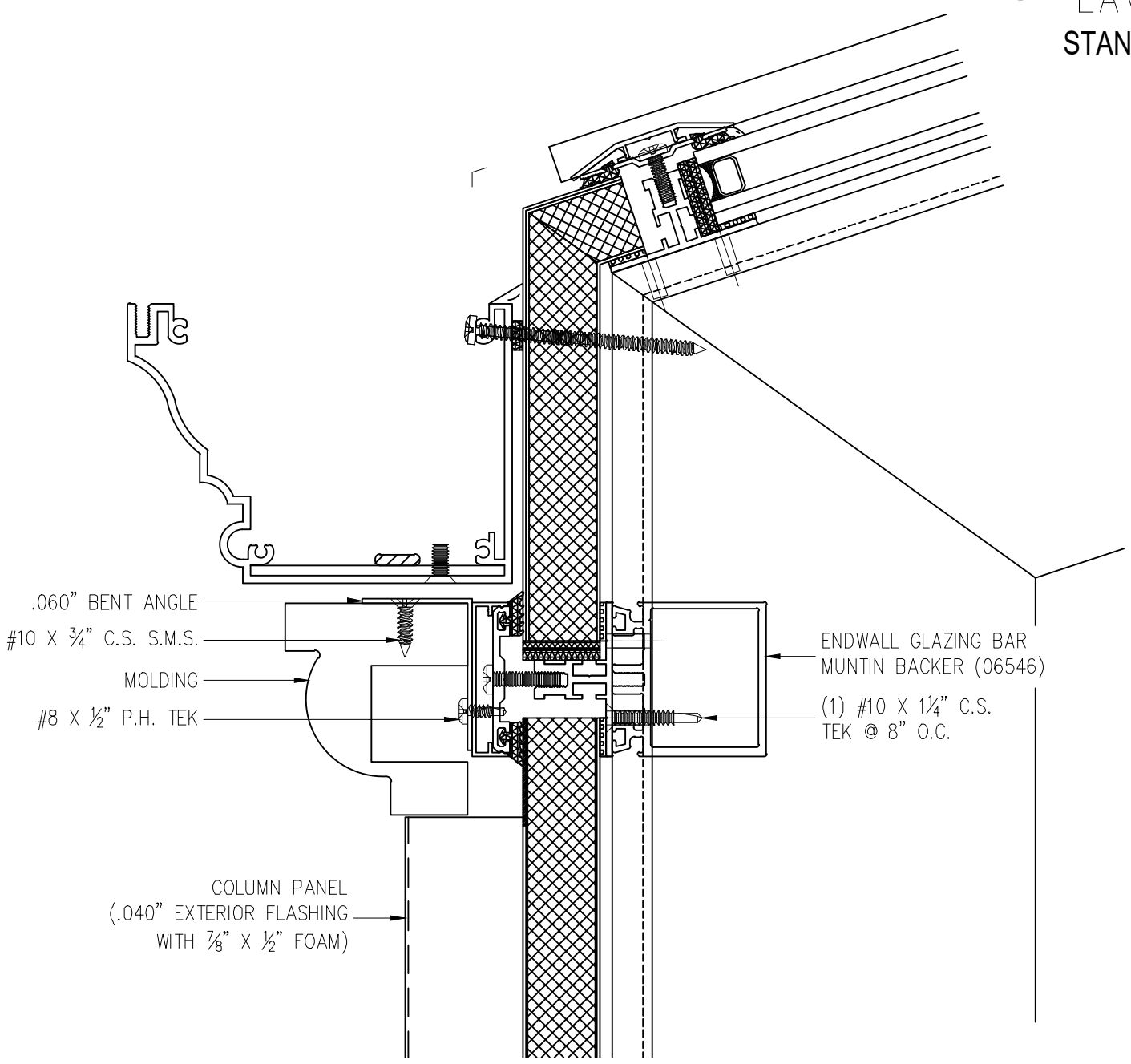

CORNER COLUMN SILL DETAIL

STANDARD DETAIL

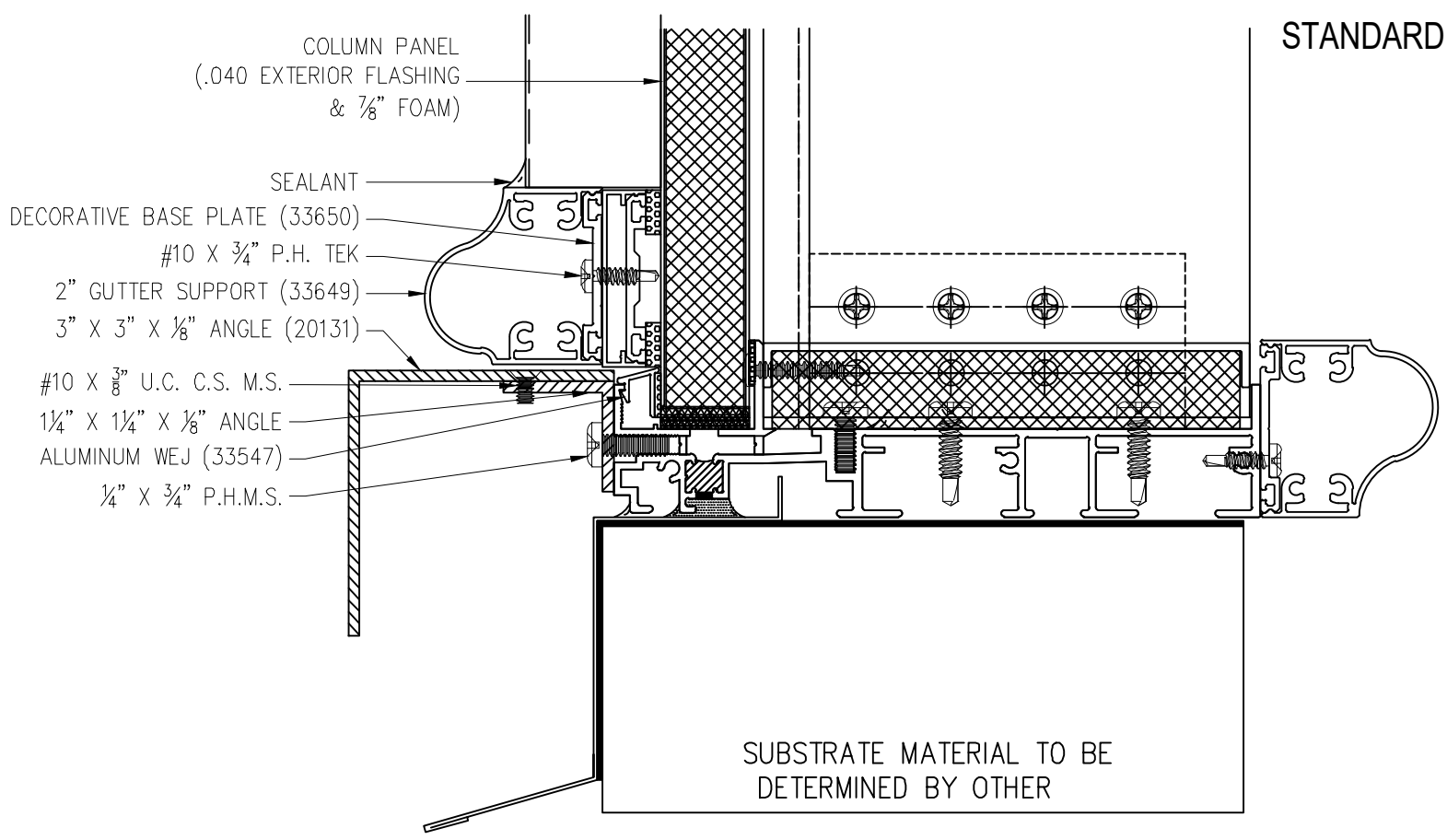

SI5000 Glazed Structures - Decorative Column

ALL DATA CONTAINED HERE IN IS CONSIDERED COMPANY CONFIDENTIAL INFORMATION AND IS SUBJECT TO OUR CONFIDENTIALITY AGREEMENT AS SET FORTH ON OUR WEBSITE AT http://www.solarinnovations.com/contact/

DRAWING SCALE: 6" = 1'-0"

SOLAR INNOVATIONS® GLASS STRUCTURES

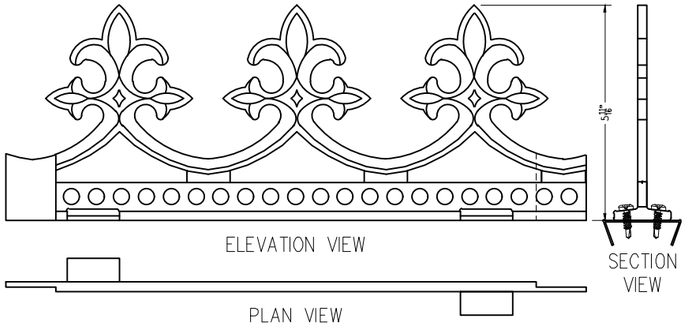

S.I. #: CA000054-00-XX

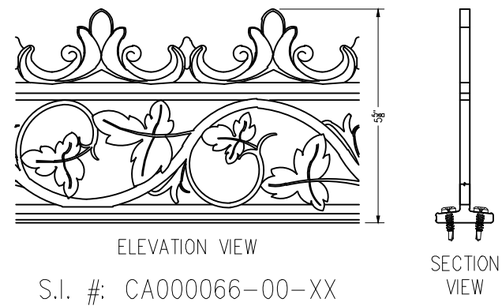

S.I. #: CA000066-00-XX

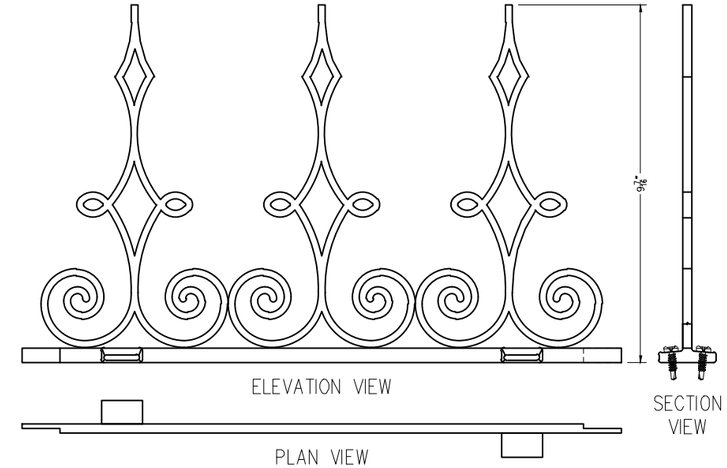

S.I. #: CA000059-00-XX

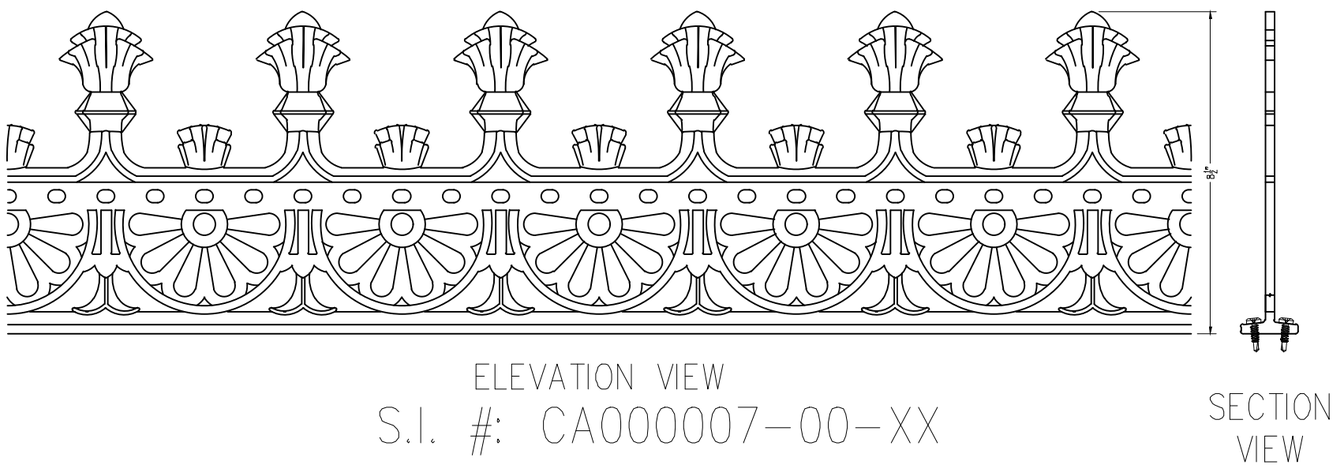

S.I. #: CA000007-00-XX

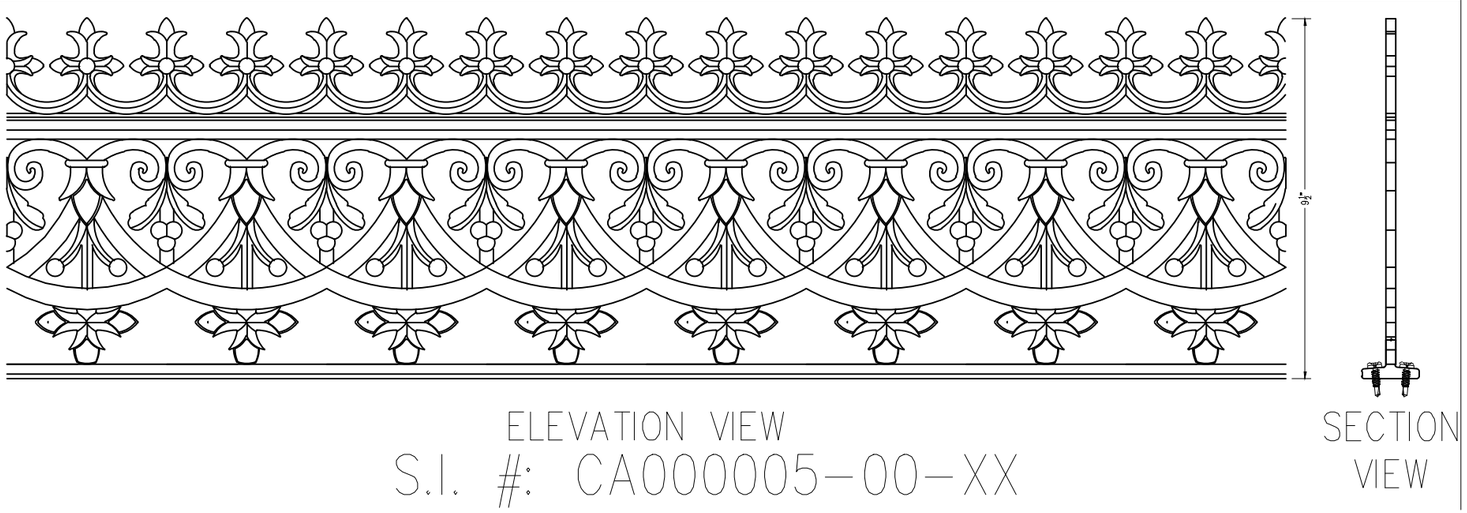

S.I. #: CA000005-00-XX

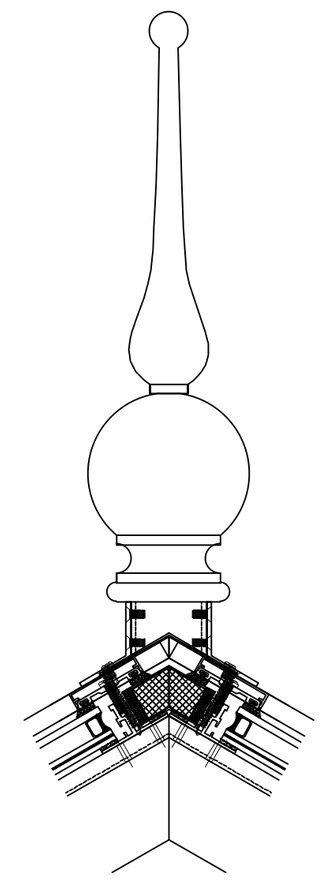

SOLAR INNOVATIONS® GLASS STRUCTURES

SI5000 Glazed Structures - Ridge Cresting Options

ALL DATA CONTAINED HERE IN IS CONSIDERED COMPANY CONFIDENTIAL INFORMATION AND IS SUBJECT TO OUR CONFIDENTIALITY AGREEMENT AS SET FORTH ON OUR WEBSITE AT http://www.solarinnovations.com/contact/

DRAWING SCALE: 3" = 1'-0"

PAGE No.: 13 OF 15

© 2021 Solar Innovations® Architectural Glazing Systems – All Rights Reserved. These plans are the property of Solar Innovations® Architectural Glazing Systems. Any use or reproduction of these plans, in whole or in part, without the written permission of Solar Innovations® Architectural Glazing Systems is forbidden.

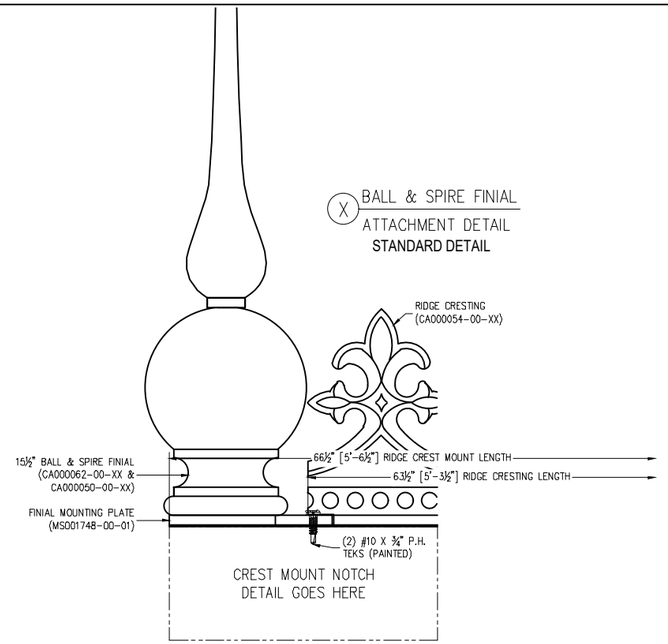

X BALL & SPIRE FINIAL
ATTACHMENT DETAIL
STANDARD DETAIL

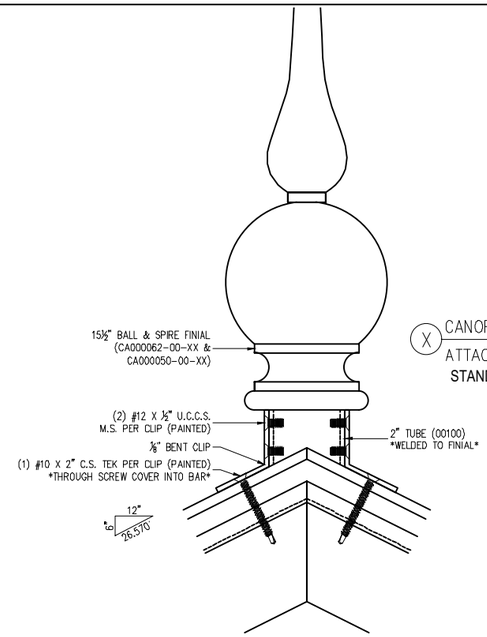

X CANOPY FINIAL
ATTACHMENT DETAIL
STANDARD DETAIL

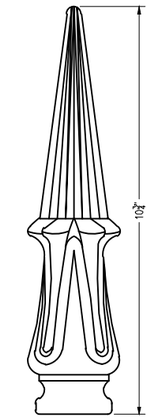

S.I. #: CA000055-00-XX
CASTING #: CA1005800

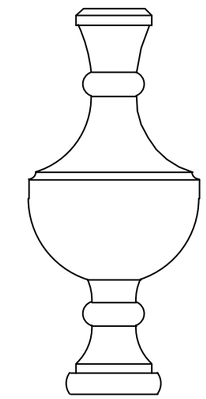

S.I. #: CA000049-00-XX
CASTING #: CA0006000

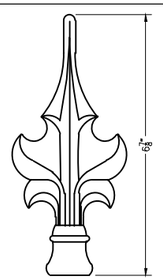

S.I. #: CA000044-00-XX
CASTING #: CA0004500

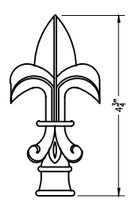

S.I. #: CA000042-00-XX
CASTING #: CA0004100

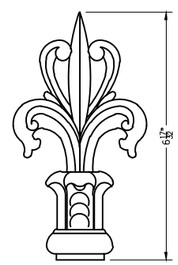

S.I. #: CA000012-00-XX
CASTING #: CA0004600

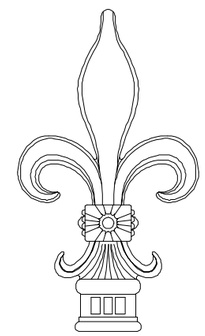

S.I. #: CA0000XX-00-XX
CASTING #: CA0007300

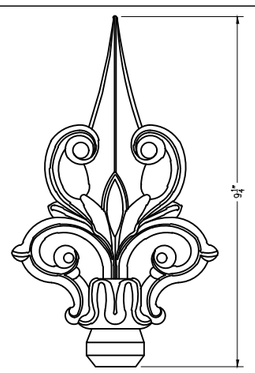

S.I. #: CA000015-00-XX
CASTING #: CA005000

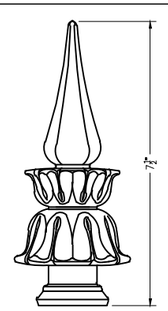

S.I. #: CA000078-00-XX
CASTING #: CA0004900

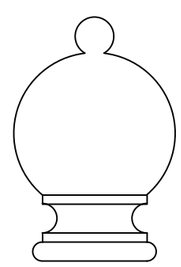

S.I. #: CA000050-00-XX
CASTING #: CA0006100

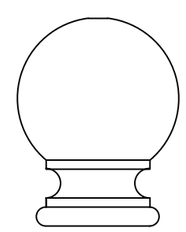

S.I. #: CA000052-00-XX
CASTING #: n/a

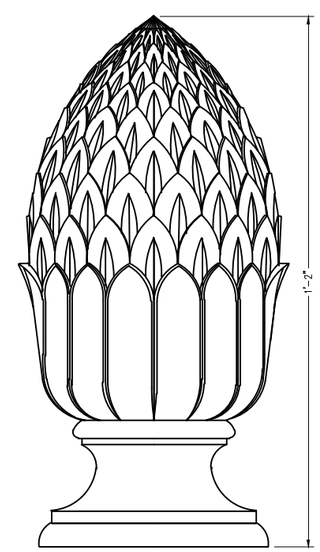

S.I. #: NONE
CASTING #: PHFR6X14

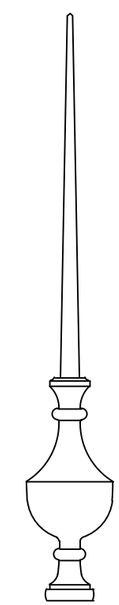

S.I. #: CA000060-00-XX
CASTING #: CA1006500

SOLAR INNOVATIONS®
GLASS STRUCTURES

SI5000 Glazed Structures - Finial Options

ALL DATA CONTAINED HERE IN IS CONSIDERED COMPANY CONFIDENTIAL INFORMATION AND IS SUBJECT TO OUR CONFIDENTIALITY AGREEMENT AS SET FORTH ON OUR WEBSITE AT http://www.solarinnovations.com/contact/

DRAWING SCALE:
3" = 1'-0"

PAGE No.:
14 OF 15

© 2021 Solar Innovations® Architectural Glazing Systems – All Rights Reserved. These plans are the property of Solar Innovations® Architectural Glazing Systems. Any use or reproduction of these plans, in whole or in part, without the written permission of Solar Innovations® Architectural Glazing Systems is forbidden.

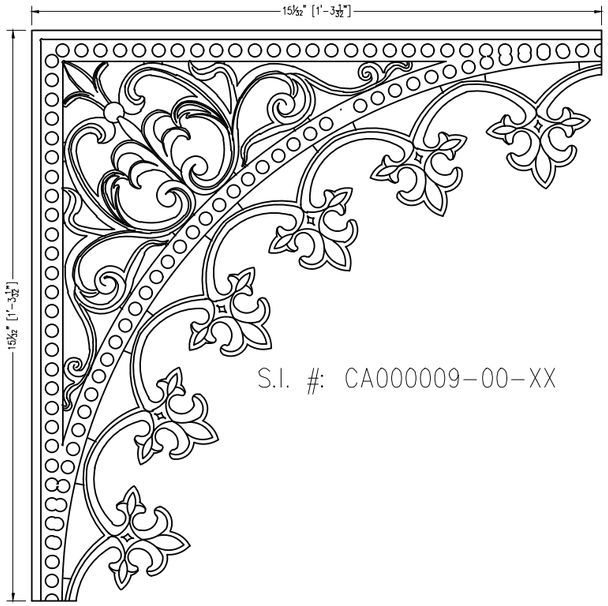

S.I. #: CA000009-00-XX

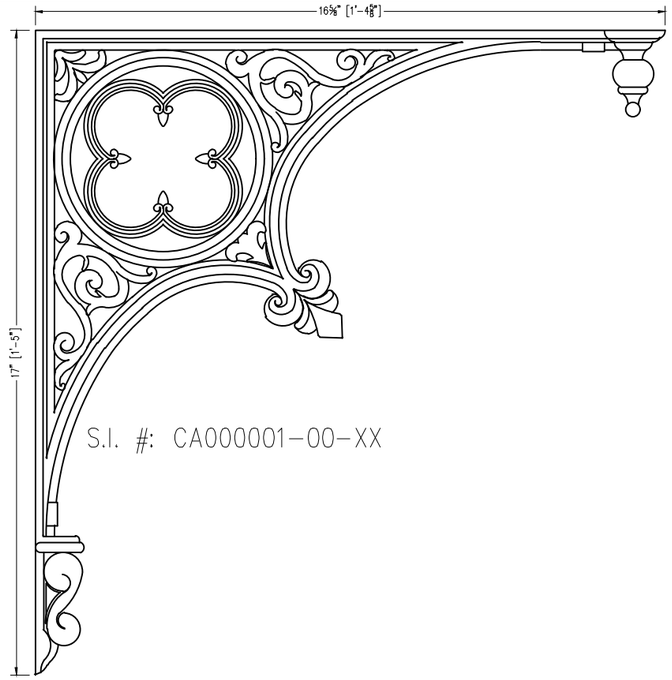

S.I. #: CA000001-00-XX

S.I. #: CA000025-00-XX

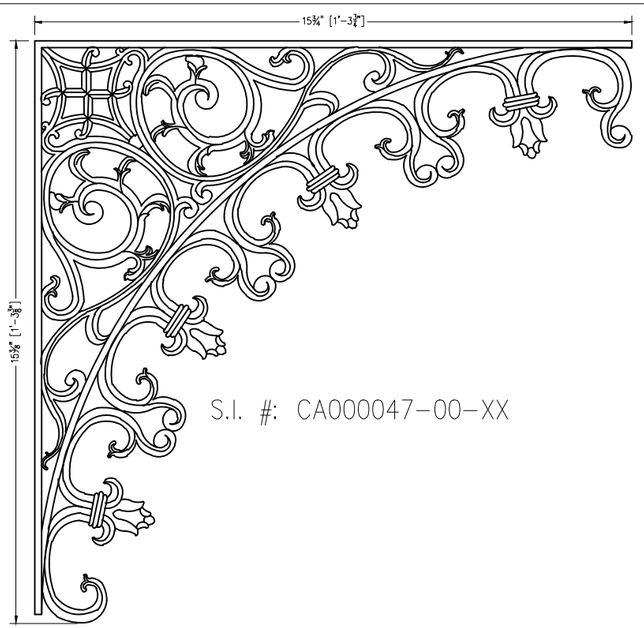

S.I. #: CA000047-00-XX

APPLIQUES

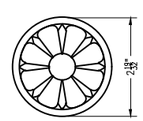

S.I. #: CA000035-00-XX

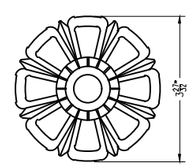

S.I. #: CA000023-00-XX

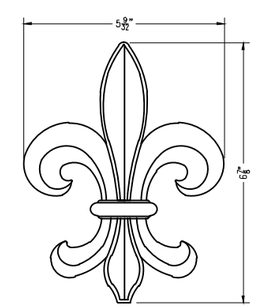

S.I. #: CA000027-00-XX

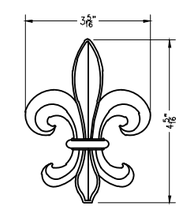

S.I. #: CA000033-00-XX

SOLAR INNOVATIONS® GLASS STRUCTURES

SI5000 Glazed Structures - Decorative Corners & Appliques

ALL DATA CONTAINED HERE IN IS CONSIDERED COMPANY CONFIDENTIAL INFORMATION AND IS SUBJECT TO OUR CONFIDENTIALITY AGREEMENT AS SET FORTH ON OUR WEBSITE AT http://www.solarinnovations.com/contact/

DRAWING SCALE:
3" = 1'-0"

© 2021 Solar Innovations® Architectural Glazing Systems – All Rights Reserved. These plans are the property of Solar Innovations® Architectural Glazing Systems. Any use or reproduction of these plans, in whole or in part, without the written permission of Solar Innovations® Architectural Glazing Systems is forbidden.